innovita

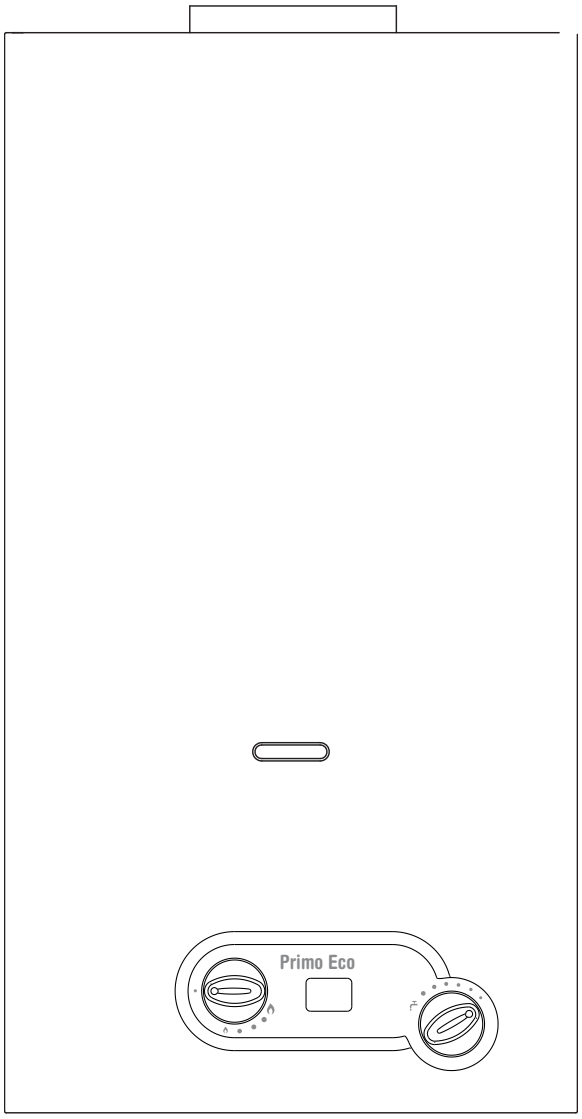

Primo Eco 11 ic D
Primo Eco 14 ic D

INSTALLATION, OPERATION AND MAINTENANCE MANUAL

Made in Italy

The device is well built in accordance with the current legislation.
The CE sign positioned on the product indicates that it conforms to the following European Directives and Regulation:

- **Regulation Gas Appliance (UE) 2016/426**
- **European Standard: gas-fired instantaneous water heaters for the production of domestic hot water EN 26:2015**
- **Directive 2009/125/EC Ecodesign requirements for energy-related products**
- **Regulation (EU) 2017/1369 setting a framework for energy labelling**
- **Delegated regulation (EU) no. 812/2013**
- **Delegated regulation (EU) no. 814/2013**

The appliance complies with the Regulation (EU) 2017/1369 setting a framework for energy labelling.
The energy label carries the information regarding the product's energy efficiency characteristics.
In this way the end consumer can identify and compare similar products and can make informed choices regarding high efficiency appliances.

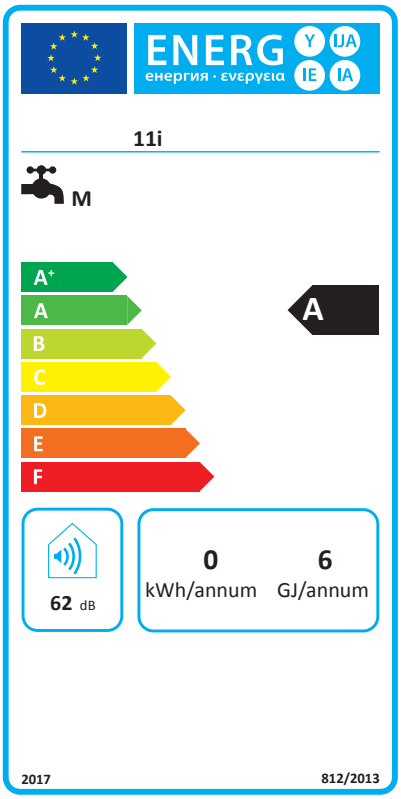

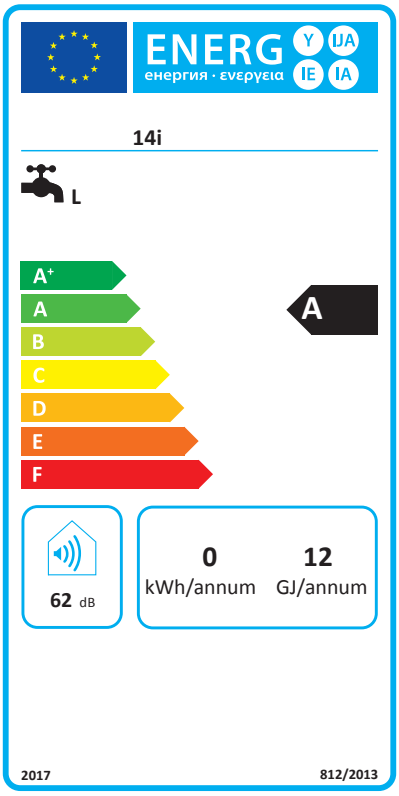

PRODUCT DATASHEET			
		11i	**14i**
Declared load profile		M	L
Indoor sound power level	dB(A)	62	62
Water heating energy efficiency class		A	A
Water heating energy efficiency class	%	72	75
Annual fuel consumption	GJ	6	12
Annual electric energy consumption	kWh	0	0
Nitrogen oxide emissions G20	mg/kWh	26	34

Before connecting the water heater, make sure the display cables are connected

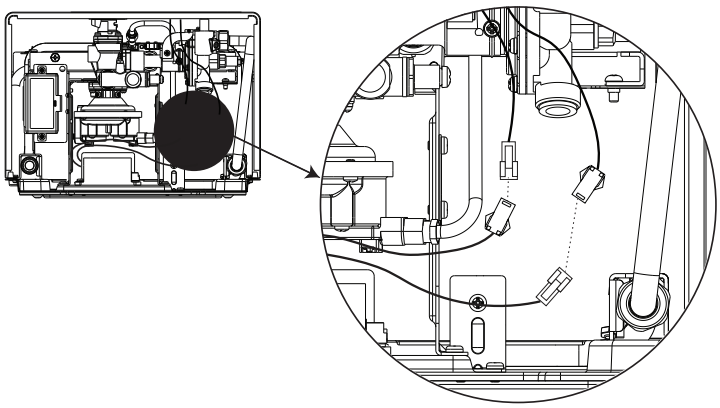

WARNING

This booklet contains information relevant to the user as well as the installer.
The user must read the following chapters: General safety, Flue gas device and Operation.

In parts of the manual the following symbols are used:

WARNING = for actions that require caution and adequate preparation

PROHIBITED = for actions that MUST NOT be performed

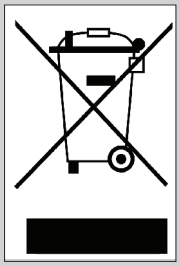

When the product has reached the end of its serviceable life, it shall be disposed of in an environmentally friendly way and disposed of according to the regulations in force.

Separate collection and recycling of the product avoid negative impact for environment and health, and allows recovery of materials, in order to obtain energy and resources saving.

INDEX

GENERAL SAFETY WARNINGS

The Operation Manual is an integral part of the product and so must be carefully preserved in order to accompany the product; if it is lost or damaged another copy can be requested from the Technical Assistance Centre.

- The installation of the device and any other repairs or maintenance must be performed by qualified personnel according to the law in force, in compliance with the installing regulations including any revisions.
- It is recommended that trained personnel install the device.
- The device must be used according to the manufacturer specifications. The manufacturer cannot be held contractually or otherwise responsible for damage caused to persons, animals or objects as a result of incorrect installation, repair or maintenance or improper usage.
- The product's safety or automatic regulation devices must not be modified unless performed by the manufacturer.
- This device is intended for heating water and therefore must be connected to a water distribution network who's load and settings are compatible with the product.
- If water spills, turn off the water supply and advise the qualified personnel at the Technical Assistance Centre.
- If the machine is not used for prolonged periods turn off the gas supply. If there is a risk of the water freezing, empty the water heater.
- If the machine breaks down or does not function properly, deactivate it, do not attempt to perform any repairs.
- The machine's maintenance must be performed at least once a year: Book a maintenance session with the Technical Assistance Centre ahead of time to save wasting time and money afterwards.
- When the product has reached the end of its serviceable life, it shall be disposed of in an environmentally friendly way; ensuring that the majority of the product is fully recycled in compliance with the installing regulations including any revisions.

When using the device the following safety rules must be applied:

- Do not use the machine for purposes other than those intended by the manufacturer.
- Do not block the intake and dissipation grills or the ventilation openings in the area where the device is installed with rags, paper or any other materials.
- If a gas leak is detected, do not switch on any electrical devices, telephones or any other objects that could produce a spark. Ventilate the area by opening the doors and windows and switch off the gas supply.
- Do not place objects on top of the device.
- Do not leave flammable containers or substances in the area where the device is installed.
- Do not attempt to repair the machine if it breaks down and/or works incorrectly.
- Children or inexperienced persons are prohibited from using the device.
- It is prohibited to open sealed elements.

To maintain the proper functioning of the device:

- Periodically clean the devices exterior with soapy water, this improves its appearance as well as preserving it from corrosion in the long term.
- Do not use solvents, powders or abrasive sponges.
- Do not clean the device and/or its parts with flammable materials (e.g. petrol, alcohol, diesel etc.).

The water heater package contains:

2 Two knobs to attach to the control panel after installation

1 Water filter to insert in the water valve pipe fitting.

1. TECHNICAL CHARACTERISTICS

1.a Technical Data

		11i			14i		
		kW	kcal/h		kW	kcal/h	
Nominal power usage (Pn)		19,3	16.600		24,3	20.900	
Nominal Thermal range (Qn)		21,7	18.660		27,2	23.390	
Minimal power usage (Pm) (MTN-GPL)		8,7 (G20) - 9,6 (GPL)	7.480 (G20) - 8.260 (GPL)		9,7 (G20) - 12,3 (GPL)	8.340 (G20)-10.580 (GPL)	
Minimal Thermal range (Qm) (MTN-GPL)		9,8 (G20) - 10,8 (GPL)	8.430 (G20) - 9.290 (GPL)		10,8 (G20) - 13,9 (GPL)	9.290 (G20)-11.950 (GPL)	
GAS TYPE		**METHANE GAS G20**	**BUTANE G30**	**PROPANE G31**	**METHANE GAS G20**	**BUTANE G30**	**PROPANE G31**
P.C.I. (15° C 1013 mbar)	MJ/m³	34,02	116,09	88	34,02	116,09	88
WI (15° C 1013 mbar)	MJ/m³	45,67	80,58	70,69	45,67	80,58	70,69
Nominal feed pressure	mbar	20	28-30	37	20	28-30	37
Consumption	m³/h	2,30	-	-	2,88	-	-
	kg/h	-	1,71	1,69	-	2,15	2,11
Burner Pressure	mbar	10,50	26,60	35,80	11,20	26,30	35,40
Ø pilot flame nozzle	mm	0,35	0,25		0,35	0,25	
N./Ø main burner nozzle	N./mm	24x0,85	18x0,48+6x0,50		30x0,85	22x0,48+8x0,50	
Ø gas connection		1/2"			1/2"		
Maximum flue gas load (max-min)	g/s	13,50-11,26	11,80-9,75	12,48-10,29	18,62-16,69	17,67-15,58	18,10-15,49
Flue gas temperature (max-min)	°C	161-101	157-110	173-118	158-86	155-115	162-110
Category		II2H3+					
NOx Emission (EN26:2015 on H_S)	mg/kWh	26	61	20	34	56	16
WATER		**11i**			**14i**		
Input range	l/min	select. min. da 2,5 a 5	select. max da 5 a 10,8		select. min. da 2,5 a 6,7	select. max da 6,7 a 13,6	
Water temperature elevation	°C	approximately 50	approximately 25		approximately 50	approximately 25	
Minimum pressure	bar	0,2			0,2		
Nominal pressure	bar	2			2		
Maximum pressure	bar	10			10		
Ø Water connections		1/2"			1/2"		
Ø flue gas release tube	mm	110			130		
DIMENSIONS AND WEIGHTS		**DEVICE**	**PACKAGE**		**DEVICE**	**PACKAGE**	
Height	mm	592	675		650	733	
Length	mm	314	361		363	410	
Depth	mm	247	280		248	280	
Weight	Kg	11,80	13,10		14,00	15,40	

Note: relative cold water temperature of 15 °C

1.a Description of the appliance

NOx identifies the group of the two most important nitrogen oxides:
- NO Nitrogen monoxide (not harmful to humans)
- NO2 Nitrogen dioxide (very harmful to humans and the environment).

NOx is formed during combustion processes at high temperatures. To reduce NOx emissions it is necessary to cool the flame.

The water inside the water heater, after have been heated by heat exchanger, gets in the burner, cools the flame and gets out to the final user.
The special burner cools the flame and check the airflow necessary for the combustion, set up “cooled flames” avoiding the loss of thermal efficiency, generating an optimal combustion with low emissions.

Primo Eco 11 ic D **Primo Eco 14 ic D**

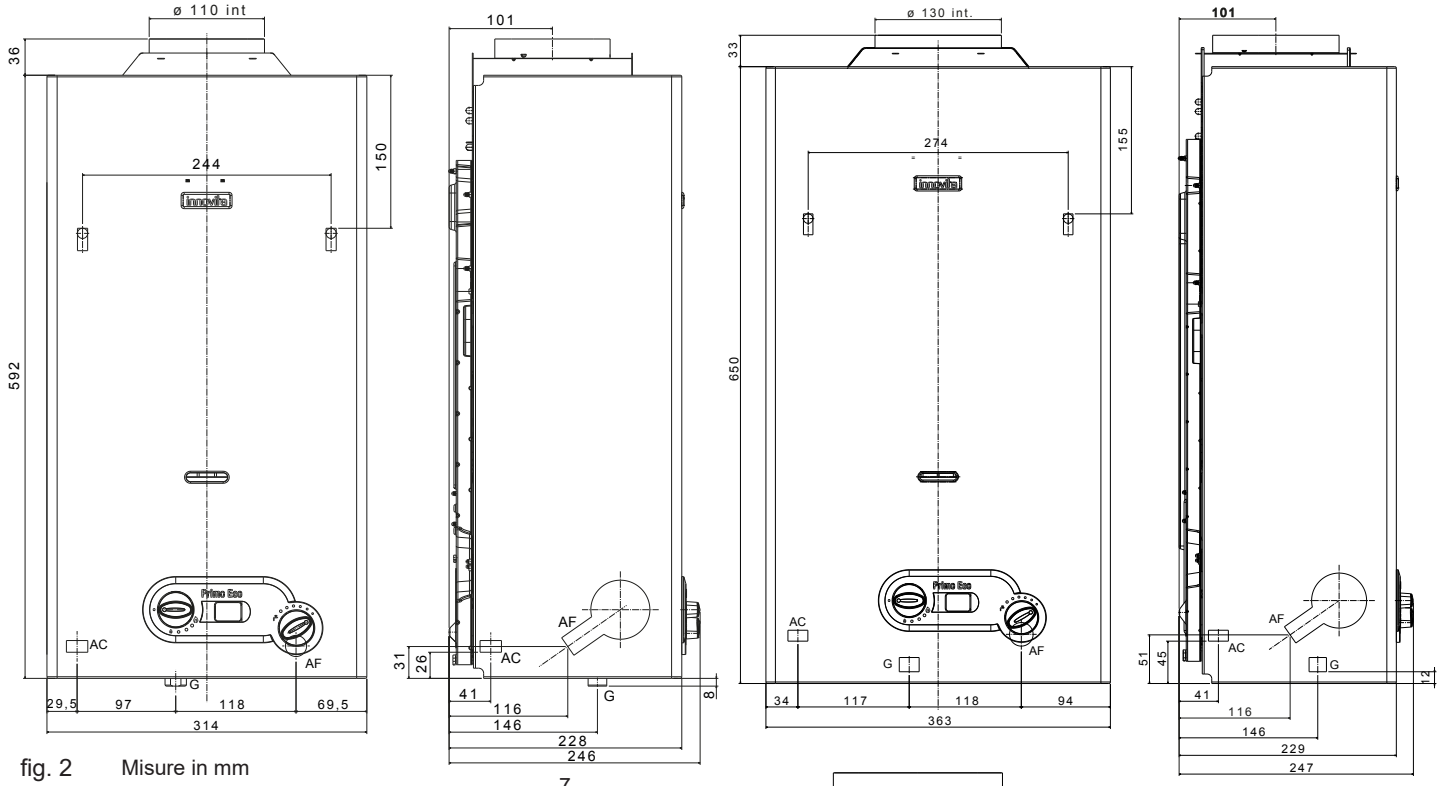

fig. 2 Misure in mm

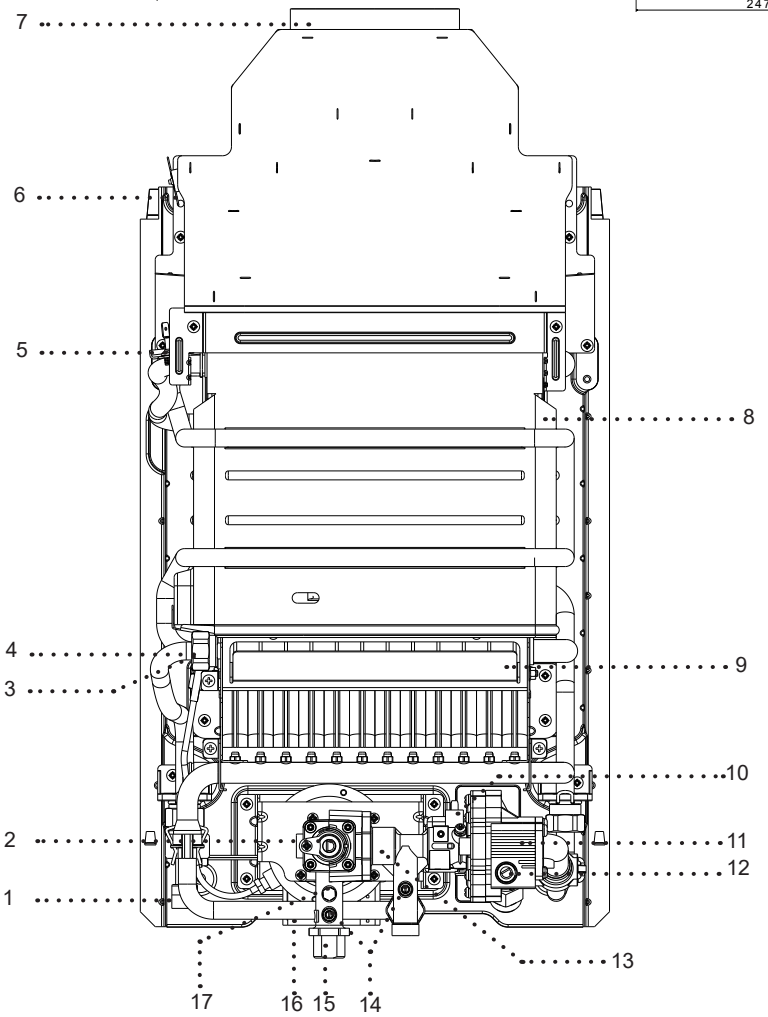

1 Sensor
2 Economiser
3 Pilot burner
4 Ignition electrode
5 Limit thermostat
6 Flue gas release safety device
7 Release hood
8 Heat exchanger
9 Burner
10 Battery box
11 Hydraulic valve
12 Temperature regulator
13 Gas valve
14 Gas pressure intake
15 Gas input
16 Electronic devices
17 Gas adjustment screws

Fig. 2

2. INSTALLATION

2.a Regulations

The use of gas devices is controlled by precise regulations.
It is essential to observe all the regulations in force.
Installation of liquid petroleum gas (L.P.G) must comply with all the distributor's requirements and those of the regulations.

2.b Wall mounting

Warning

Do not install this device in an area that contains dust, greasy vapour and/or corrosive elements.

- The device must be installed on a suitable wall surface in proximity to a fume disposal flue
- It is vital to leave the minimal distances around the device as shown in fig 3 to allow for maintenance operations to take place.

Location

The water heater must not be tightly placed in an enclosure or slot, it should have an adequate flow of air around it

- The water heater must not be placed above a kitchen or other cooking devices that might deposit grease vapour on its exterior leading to corrosion
- Surfaces that sensitive to heat (e.g. wood) must be protected using appropriate insulation.
- Fig. 1 displays the dimensions necessary for wall mounting

2.c Room ventilation

The installation of the water heater must comply with regulations in force including any updates. See paragraph 2.a
Warning: This device can only be installed in venues that are permanently ventilated according to regulation in force.

Air circulation

It is vital that areas where gas devices are installed (type B) have access to the amount of air necessary for the regular combustion of gas as well as the ventilation of the venue.

- It is prohibited to use an extractor fan, fireplaces and other similar devices at the same time as the water heater
- The area where the water heater is installed must have a regular flow of air for ventilation.

Air flow

The flow of air must occur by the following means:
- Permanent openings in the wall that lead outdoors
- Single or collective ventilation ducts.

The air used for ventilation must be taken directly from an outside location, that is far from sources of pollution.

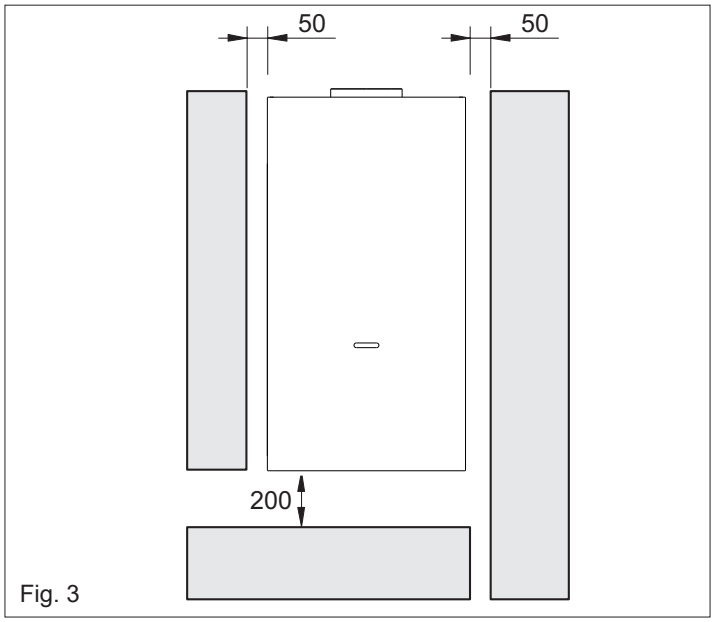

Fig. 3

Indirect ventilation from adjacent areas are permitted with the following limitations:
- The adjacent area is equipped with direct ventilation
- The devices within the area to ventilate are connected to a waste duct
- The adjacent area does not contain a bedroom and is not a common area;
- The adjacent area is not a fire hazard such as a storage area for flammable materials, garage etc.
- The adjacent area is not lower than the area to ventilate as this might lead to an opposing draught (this can be caused by other devices that operate on the basis of combustion, a fireplace or any suction device that have not been given an adequate air supply)
- The air flow from the adjacent area occurs freely through permanent openings.

2.d Electrical connection to battery

The device is powered by a 1.5 V battery, alkaline long lasting model LR20, thus it is not necessary to connect the device to a power socket.

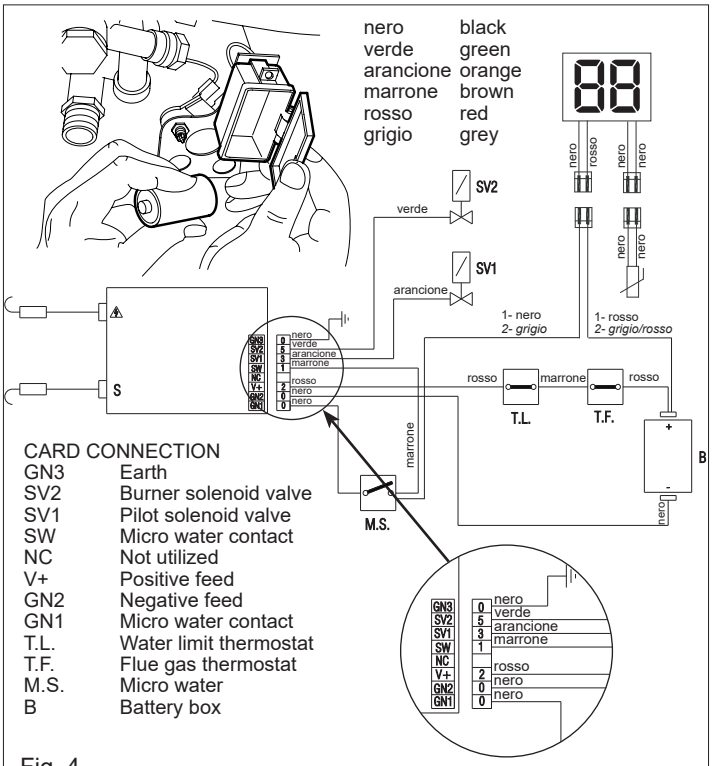

Fig. 4

2.e Gas Connection

See paragraph 2.a
Determine the pipe diameter according to current regulations. Before installing the device blow in the gas pipe to eliminate any residue from its manufacturing. Connect the water heater to the internal system's gas pipes and place a tap above the device for the halting and release of gas.
The main gas supply pipe must be connected by a flat seat fittings that allows the insertion of a gasket specifically provided for gas connections.
Do not use a conical seat fittings or union conical with threading sealed with hydraulic hackled hemp or teflon.
The water heaters that are powered by tanks of L.P.G. gas with regulation and interception devices, must be connected correctly so to guarantee the safety of persons and the surrounding area.
Follow all related regulations.

When initially installing the device qualified persons must perform the following tests:
- Check that the internal and external parts of the gas supplying device are sealed;
- check that the gas quantity supplied is equal to that required by the device;

- check that the device receives the type of gas it is manufactured to process;
- check that the gas supply pressure does not go beyond the maximum pressure values displayed on the information plate;
- check that the gas supply system supplies the necessary amount of gas to the device and that it is equipped with all the necessary safety devices prescribed by current regulations.

If the user is absent for a lengthy period, turn off the main gas supply tap.
Do not obstruct the area's ventilation openings where the device is installed to avoid dangers such as the build up of toxic and explosive substances. Do not utilize gas tubes to earth electrical devices.

2.f Water connection

Connect the water heater to the water supply and insert a tap to intercept the water above the device. From the front, the cold water input is on the right and the hot water output is on the left.

⚠ Insert the filter into the water valve input fitting.

⚠ Remove the plastic nut from the hot water output fittin before connecting it to the water supply.

⚠ Check the water hardness (°f).
In case of high water hardness we recommend to install upstream of the appliance the water softener device or other device in compliance with the regulations including any revisions.

Ensure that the tubes of you water system are not used to earth your electrical system or telephone, they are absolutely inappropriate for performing this task.
In a short amount of time this can damage tubes and the device.

2.g Disposal of waste product

This B11BS water heater is supplied with a device for releasing flue gas.
For output of combustion by-products refer to the regulations in force including any updates. See paragraph 2.a
The gas devices with an attachment for a waste gas flue must be connected directly to properly working chimney or flue pipe; only if these devices are not present is it then permitted to release gases directly outside.
The fitting of devices to a chimney or flue pipe must occur via a smoke channel. Smoke channels must be connected to a chimney or a smoke channel in the same or adjacent area to where the device is installed and must be made of materials resistant to mechanical strain, heat and the effects of combustion by-products and their condensation. The flue gas temperature must always be above condensation temperature in all points of the smoke channel regardless of external conditions.

FLUE GAS RELEASE SAFETY DEVICE

The product is equipped with a series of flue gas release safety devices. The device ensures the correct release of combustion by-products; the flow of combustible gas to the release conduit and the smoke channel.
The safety device contains a "thermostat", it can stop the flow of gas to the main burner and the pilot flame.
The safety device can be triggered by the partial or total obstruction of the release conduit or the smoke channel.
To reset the device it is necessary to press the flue gas thermostat key (fig. 5) close use a screwdriver and reopening the hot water tap.
If the device or its electrical connections breaks down, the product can not be put ON, it ensures a safe condition
If the device or its electrical connections breaks down, the machine operation is blocked.
If the machine is constantly blocked as a result of the flue gas safety device, **it is necessary to request the assistance of a qualified technician according to law in force**, to check the correct release of flue gas through the release conduit and/or the smoke channel, according to the installation regulation.

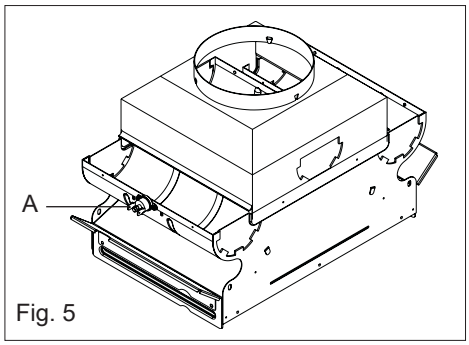

Fig. 5

It is highly prohibited to attempt to modify or remove the flue gas safety device; this risks the safety of the user and persons in the area. Only a qualified technician who is authorised by the manufacturer can meddle with the safety device in order to check it's functionality or to substitute it if necessary.
If it is necessary to replace the device it is vital to only use "original parts" supplied by the manufacturer since it has been designed, studied and regulated to be fitted with the water heater.

1	Release hood
2	Flue gas safety device
3	Water limit thermostat
4	Heat exchanger
5	Burner
6	Sensor electrode
7	Pilot burner
8	Ignition electrode
9	Injector
10	Hot water output
11	Pressure intake
12	Temperature selector
13	Venturi
14	Hydraulic valve
15	Flow regulation gas screw
16	Water filter
17	Membrane
18	Cold water input
19	Economiser
20	Gas valve
21	Safety device
22	Gas filter
23	Battery
24	Electrical card
25	Microswitch
26	Sensor

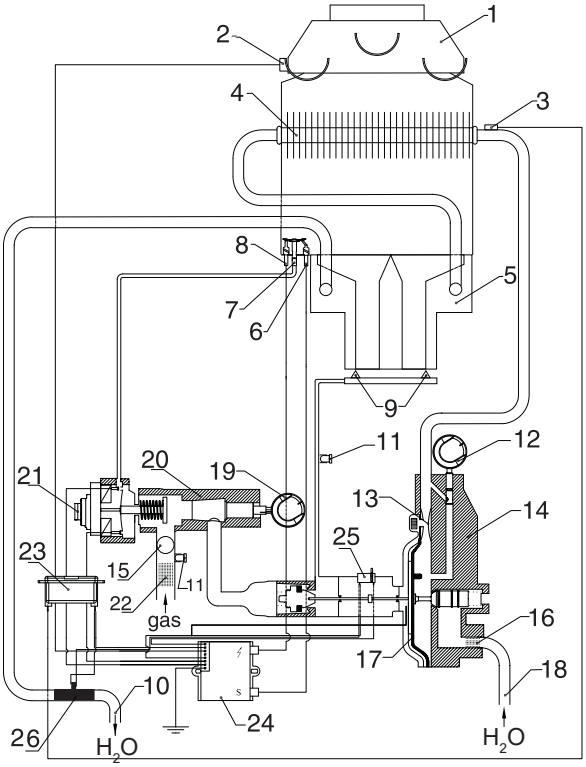

2.h Gas transformation

Transforming the product so it may receive a different type of gas can be easily performed even while it is mounted. The instructions for transforming and regulating the product to receive various types of gas are below.
This operation must be performed by qualified personnel according to law in force.

TRANSFORMATION FROM METHANE TO LPG
Transforming the product so it may receive a different type of gas can be easily performed even while it is mounted.
Before any operation ensure that the gas supply is switched off.

I – SUBSTITUTION OF THE PILOT INJECTOR
- Disconnect the pilot flame tube (fig. 6)
- Remove the pilot injector (fig. 7)
- Insert the injector contained in the transformation kit

II – SUBSTITUTION OF THE BURNER MANIFOLD
- Remove the safety clip
- Remove the fixing clip (gas pipe-burner manifold) (fig. 8)
- Loosen the fixing nut (gas pipe-gas valve)
- Remove the gas pipe
- Loosen the fixing screws of the burner manifold (fig. 9)
- Remove the burner manifold
- Replace it with that contained in the gas transformation kit
- Fix the lateral screws

⚠ The manifold is already provided of injectors, it's not necessary to replace them.

III – SUBSTITUTION OF THE MODULATION VALVE
- Loosen the screws indicated in fig. 10
- Remove the cold water entry pipe loosening the nut
- Disconnect the microswitch's cables
- Loosen the nut shows in fig. 11
- Remove the 4 screws shows in fig. 12
- Turn to the right the water/gas group as shown in fig. 13
- Extract the large spring and the small spring/modulation valve set (fig. 14)
- Substitute the modulation valve with the one in the kit
- Insert the valve and the large spring, taking care with the direction of the insertion and making sure that the drilled spring guide disc is in its correct position (fig. 14)
- Remount the components operating in the opposite direction
- Connect the gas pipe to the burner manifold being careful to insert the two clip (safety and fixing clip)
- Fix the nut (gas pipe-gas valve)

IV – DISABLING THE GAS ADJUSTER
- Remove the protective cap (fig. 15)
- Regulate the supply calibration screws so that the maximum amount of gas can pass (disk completely horizontal) and check the pression values (refering to the technical data table).

Note: It is necessary to use a pressure regulator that operates at 30 mbar for Butane Gas and at 37 mbar for Propane Gas. The above values must be measured using a pressure gauge connected to the devices pressure entrance.

TRANSFORMATION FROM LPG TO METHANE GAS
Execute operations I, II and III described above

IV – ENABLING THE GAS ADJUSTER
- Remove the protective cap (fig. 15)
- Regulate the pressure screws so that the burner reaches the pressure indicated on the technical data.

Note: ensure that the gas pressure is at 20 mbar.

⚠ After regulating seal the lid with paint, lacquer or other such materials.

⚠ Check that all the disassembled parts are perfectly sealed once the device is operational using a soapy solution.

⚠ Write on adhesive paper "device transformed", including the date of the operation, the name and signature of the person who performed the transformation and attach it to the device near the older information plate.

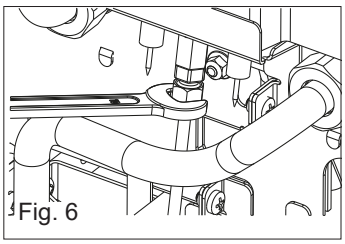
Fig. 6

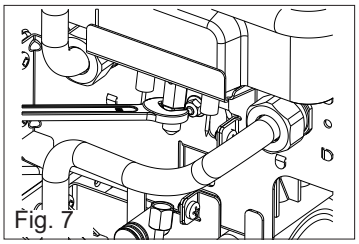
Fig. 7

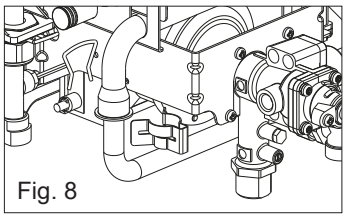
Fig. 8

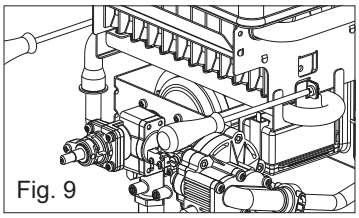
Fig. 9

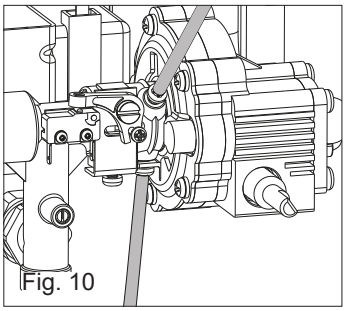
Fig. 10

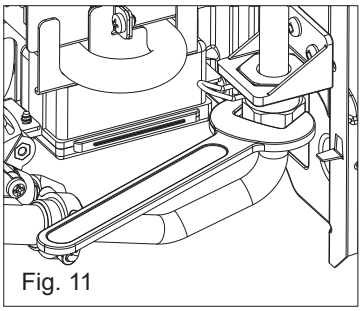
Fig. 11

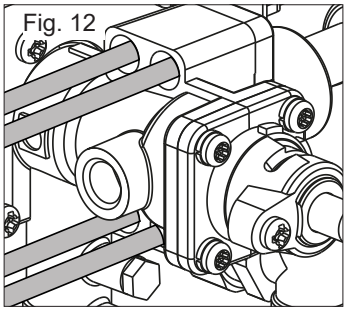
Fig. 12

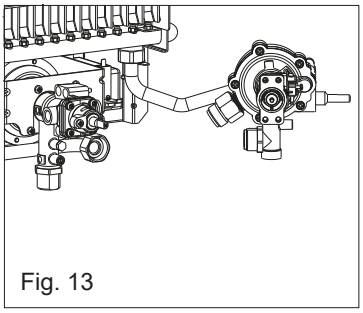
Fig. 13

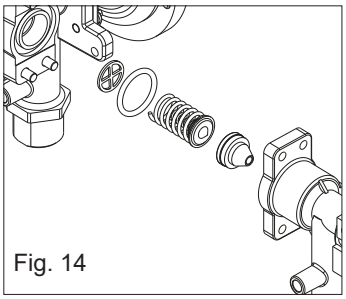
Fig. 14

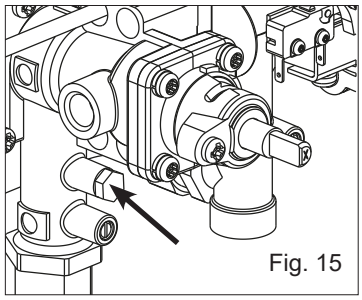
Fig. 15

3. OPERATION

A = Gas economizer on/off

● off position

minimum gas level

maximum gas level

B = Water temperature selector

C = Display, viewer water temperature

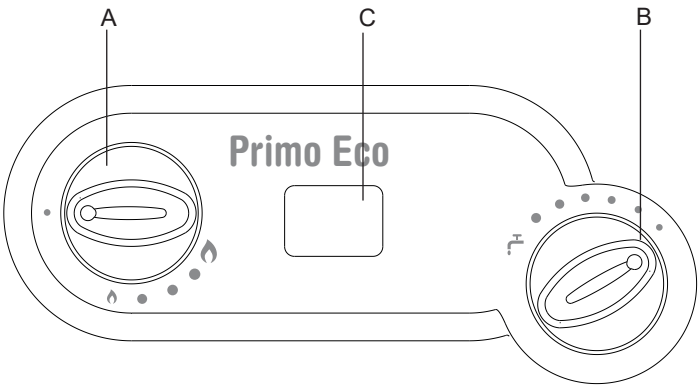

Fig. 16

3.a Function

The water heater is used for the production of instant hot water. The removal of hot water can be preformed by multiple taps.
By turning on the relative tap, the main burner switches on heating the water that passes.
These devices with a modifiable flame are particularly suited for usage with mechanical mixers and thermostats.
This water heater, in contrast with other water heaters with a fixed flame, has a modulation valve to optimise the water heaters operation. It allows for the water to be heated using less water pressure and gas by modulating the flame according to the amount of water used, maintaining the water extracted at a constant temperature.
The water heater uses automatic variation that is “PROPORTIONAL”, able to change the gas consumption (modulating the flame) to respond to the amount of water extracted.
This device is equipped with an electronic tool that is powered by a 1.5 V battery that automatically switches on the pilot flame and then the burner every time that hot water is extracted.
The flame is switched on using a card that ionizes the flame.
Model 11i: for the extraction of 2,5 to 5 l/min the temperature of the water supplied remains at 60°C, (in this case the has valve supplies the burner with the necessary quantity of gas proportional to the water supplied), above 5 l/min to 11 l/min the water temperature varies from 60°C to 40°C.
Model 14i: for the extraction of 2,5 to 7 l/min the temperature of the water supplied remains at 60°C, (in this case the has valve supplies the burner with the necessary quantity of gas proportional to the water supplied), above 7 l/min to 14 l/min the water temperature varies from 60°C to 40°C

3.b Usage

Ensure that the gas tap and all water taps are switched off

- Turn on the Main gas supply tap or that of the gas tank if using Liquefied Petroleum Gas (L.P.G.)
- Open the gas tap, not supplied with the device, placed immediately before the water heater on the gas input pipe
- Rotate knob A towards the large flame (ON), during rotation, when the small flame is reached it is necessary to press lightly while turning until it reaches its destination.
- When hot water is requested, the device automatically turns on the pilot flame, this lights the main burner.
- When the hot water request has terminated (turning the water tap off) the burner automatically switches off, the device then awaits another heating request.

If after 60 seconds it does not switch on, the flame detector interrupts the flow of gas and blocks the device.
To reuse the device after it has been blocked, close the hot water extraction tap and then reopen it to restart the sequence.
If the main burner accidentally switches off, the device will attempt to turn it on again.
If within 60 seconds the device does not function it is blocked.
The device is built to function with normal water pressure; in addition a temperature selector B is also supplied.
Rotate the knob completely to the left to obtain the maximum water output or completely to the right for the minimum water output.
The machine is switched off by rotating knob A to the (● OFF) position.
When the water heater is not used for long periods close the gas supply tap or the LPG gas valve on the tank.
For the best operational results it is recommended to have a qualified technician service the machine at least once a year.

Gas economizer
The device is equipped with a gas economizing device which is used to choose the temperature of the water so it may be supplied at the temperature necessary while saving gas.
The economizing device is activated by turning the knob A until it reaches the picture of the small flame (MIN). Using the economizer limits the amount of heating when the hot water usage is modest (water supplied is already warm or there is a reduced usage, for example in summer).

DANGER OF FREEZING
If there is a possibility that the area where the device is stalled could reach below 0°C, the device must be emptied of all water contained.

4. MAINTENANCE

To maintain the machine at maximum efficiency, have qualified personnel perform a maintenance check at least once a year.
Before cleaning or performing maintenance, opening or disassembling the panels, switch off the device and turn off the gas supply.
Check the main burner and the pilot flame, the ignition electrode, the safety valve and that there is no leakage. Check that there is nothing obstructing the passages within the exchanger smoke channel.
To clean the outside of the panels utilize a cloth with soap and water.
Do not use solvents, powders or abrasive sponges.
Do not clean the device and/or its parts with flammable materials (e.g. petrol, alcohol, diesel etc.).

4.a Removing the casing

To remove the outer casing follow the steps below:

- Remove the selector Knobs (A and B)
- Remove the screws (C)
- Shift the casing upwards to free it from the upper and lateral hooks
- Shift the casing forwards
- To reinsert the casing, follow the above steps in reverse order

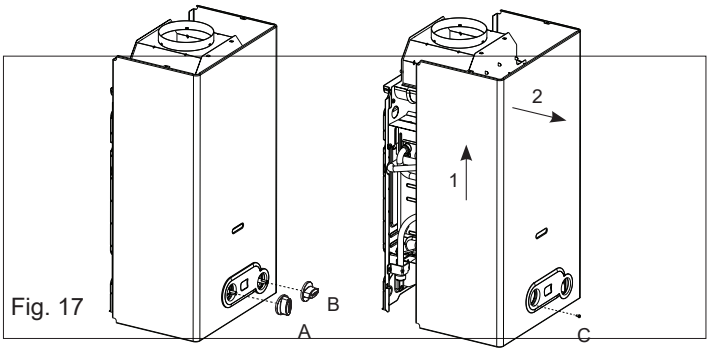

Fig. 17

4.b Replacement of the electrode

For the correct position of electrode refer to figure 18.

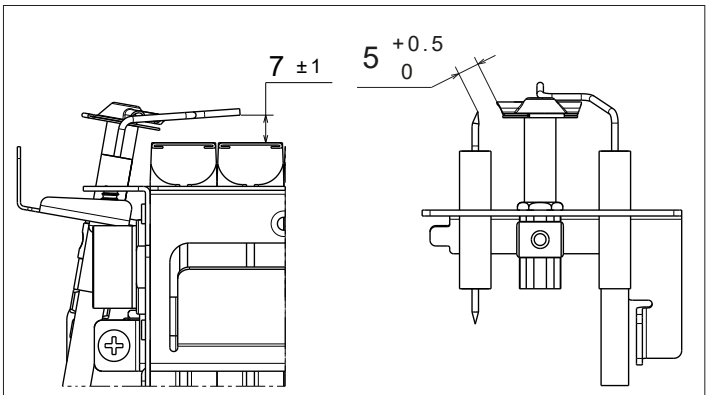

Fig. 18

4.c Troubleshooting: problems and solutions

For the best functioning of the water heater, to prolong its lifetime and ensure that it is always safe, ensure that it is inspected at least once a year by a trained professional. The trained professional is to perform the following maintenance operations:

- Remove any rust from the burner
- Remove any deposit on the glow plug by the electrode
- Clean the combustion tank
- Check the ignition, switching off and general functionality of the device
- Check that the gas and water tubes and connections are sealed

Warning: the flowing repair instructions are only to be performed by qualified and authorized technicians.

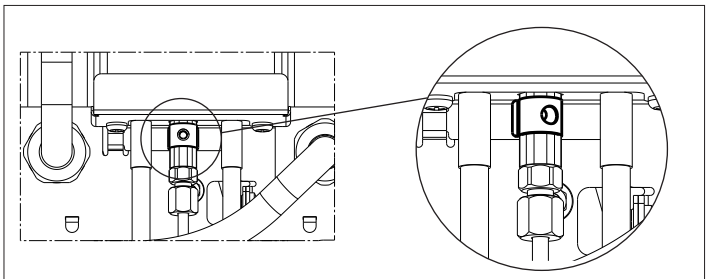
Fig. 19

PROBLEM	CAUSE	SOLUTIONS
There is no spark	- Exhausted battery - Electrical cable of device is disconnected - Electrical card is broken - There isn't sufficient water pressure - The membrane is broken - The electrode is damaged	- Substitute - Insert - Test, substitute - Repair the device to guarantee pressure, rotate the selector knob all the way to the right - Substitute - Substitute
The pilot does not switch on when there is a spark	- Safety device broken - Uncorrect distance burner-electrode - No gas supply - Air in the gas tubes	- Substitute - Ref. fig 18 - Open the gas tap - Release gas
Trouble in ignition	- Uncorrect distance burner-electrode - Air-gas mix uncorrect	- Ref. fig 18 - Set the aperture of the hole (fig. 19)
The burner does not switch off when the water turns off	- Grime on the gas shutter - Valve piston or stem is locked in open position - Micro lever is locked in open position - If an LPG supply, check the gas pressure	- Test, clean - Disassemble, clean and eventually substitute - Test - Regulate and if necessary substitute the tank pressure regulator
The exchanger blade becomes dirty in a small amount of time	- Poor draught or dusty surroundings - Yellow flame - Excess gas consumption	- Check the smoke channel efficiency - Check the gas type and clean the burner - Check and regulate
There is a smell of gas	- Due to the loss of gas in the tubes, check the tubes and find the leak	- Do not activate electric switches or any object that produces sparks in local area
There is a smell of gas	- It can be caused by obstruction in the flue gas circuit - Excess gas consumption	- Check the efficiency of the smoke channel and the flue gas conduit - Check and regulate

5. SERIAL NUMBER PLATE